# Table-Top Hologram Display

CMPE2965 CAPTONE PROJECT BY

DANIEL CHU, KADEN SPARROW

# Introduction

(Richau, 2019)

# Outline

- Embedded hardware
- Electro/Mechanical hardware
- Embedded software
- Server software
- Challenges
- Results

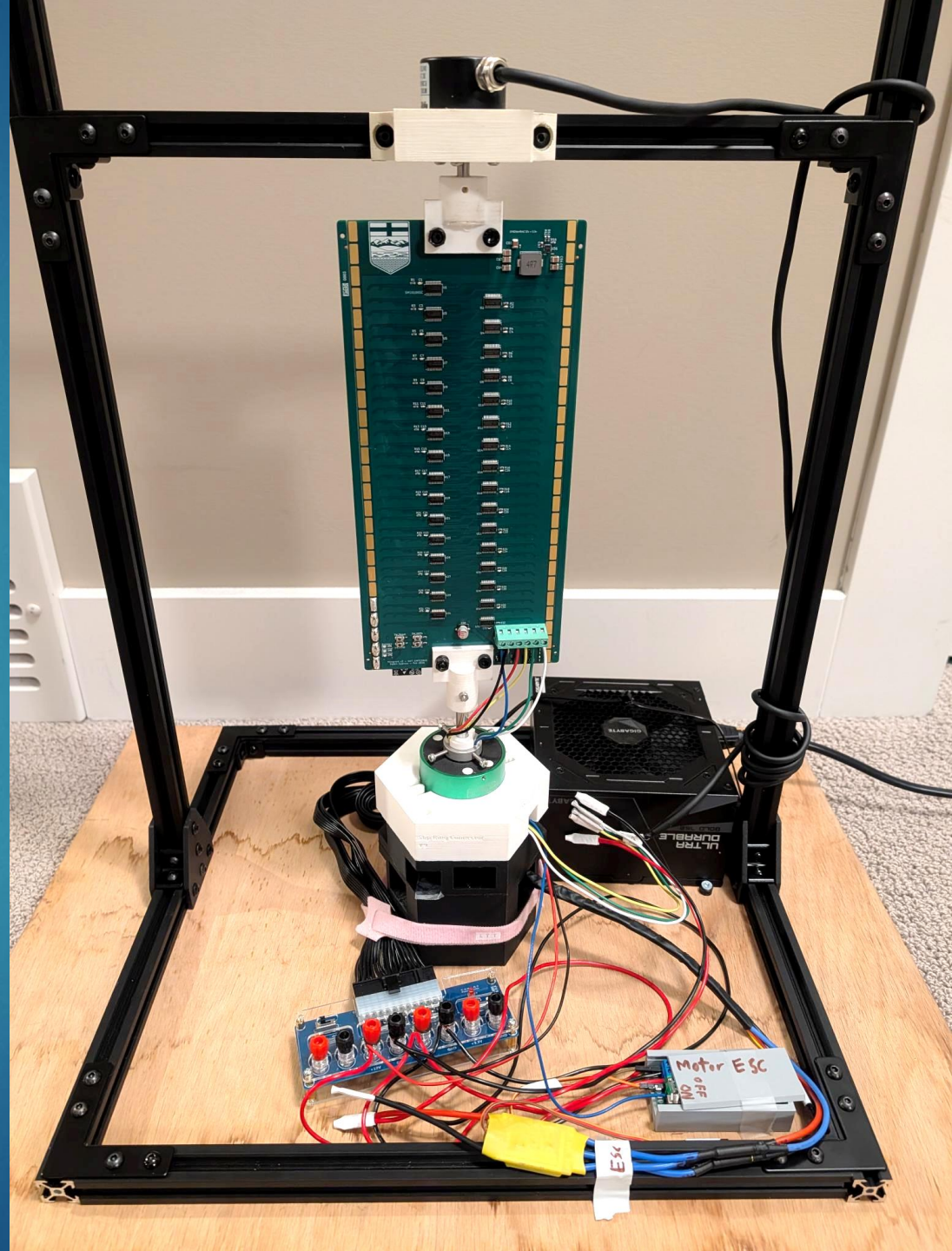

# Embedded Hardware Rotating Display PCB

- ESP32-S3-WROOM-1(N16R8)
- 32 x 16 LED array (512 total)
- Debug and brightness control buttons
- Debug LEDs (separate from array)
- Pads for soldering on counterweight
- Resettable fuse

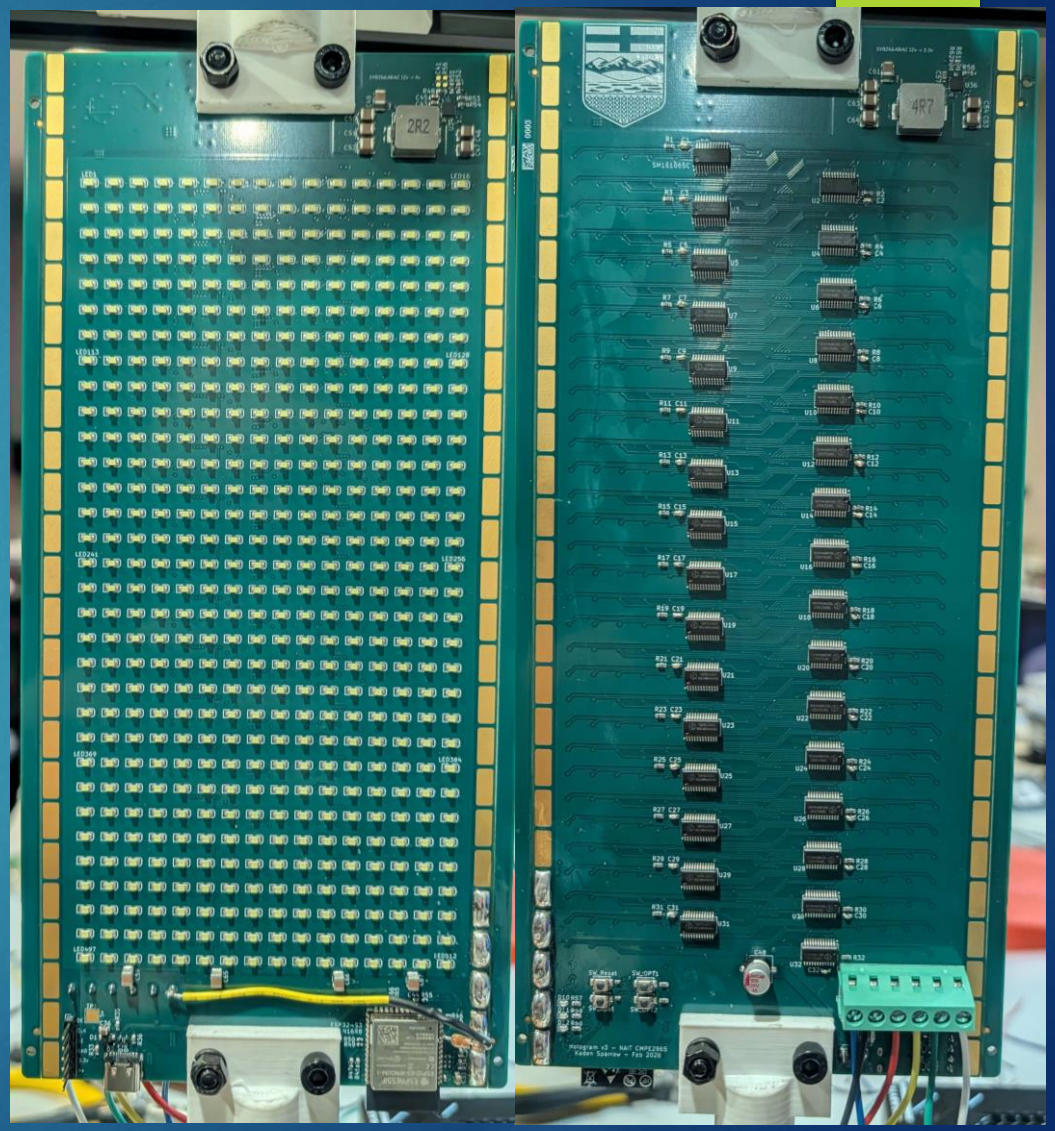

# Electrical/Mechanical Components

- 12V Electronic speed controller
- 330KV brushless motor
- 6-Wire slip ring
- Incremental rotary encoder
- Modular ATX power supply

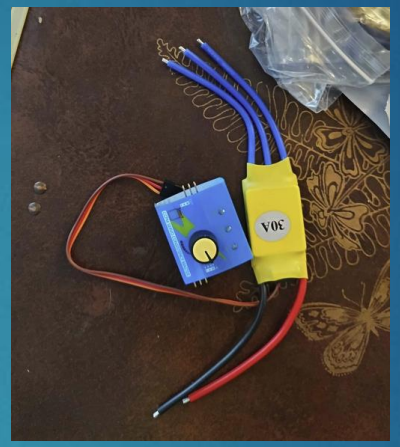


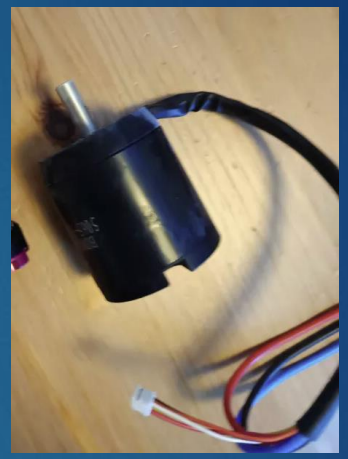

# Structural Components

- 3D printed parts to mount mechanical components
- 2020 T-Slot Aluminum extrusions and a plywood base as a structural frame
- All 3D printed components designed in Onshape

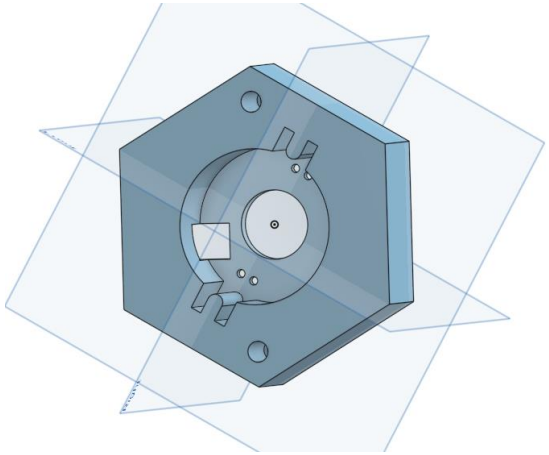

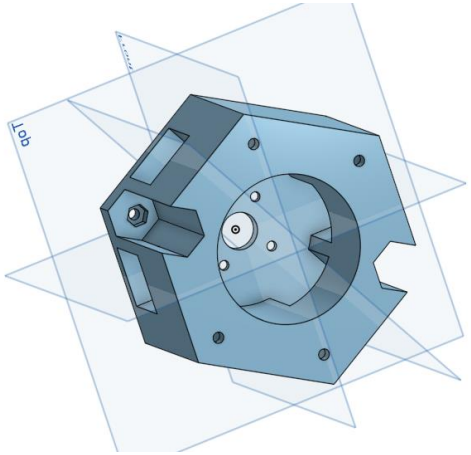

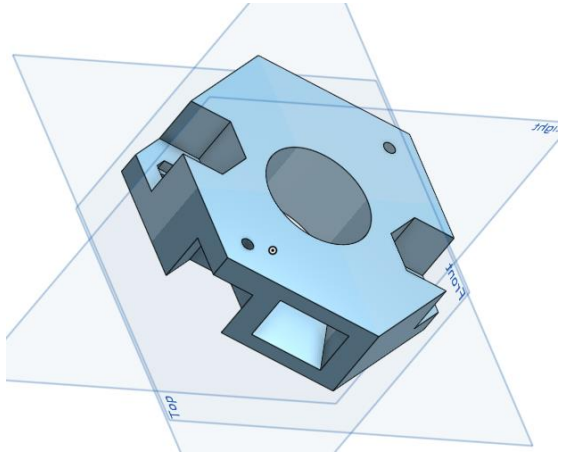

# Wireless control

- linear_index = (frame_index * slice_count) + slice_index;

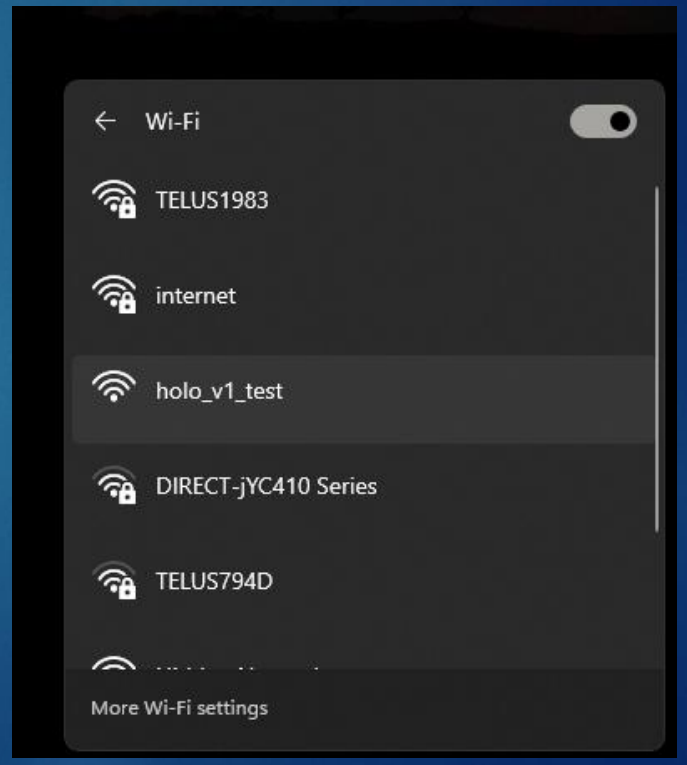

# Timing the Display

- ENC_PPR is the number of triggerpoints on the encoder per rotation
- Slice_Triggerpoint[ i ] = ( i x ENC_PPR ) / slice_count

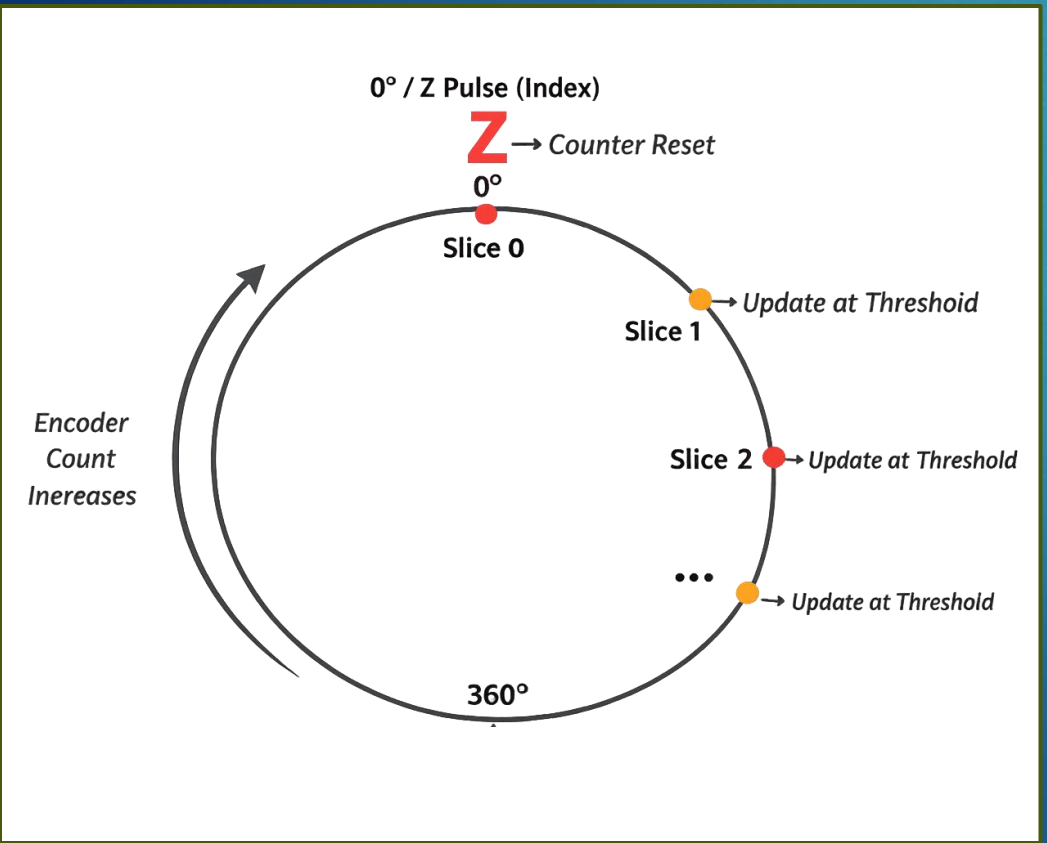

# Voxel Conversion Tool

- Command Line tool written in python
- Converts a 3D model into our custom cylindrical format

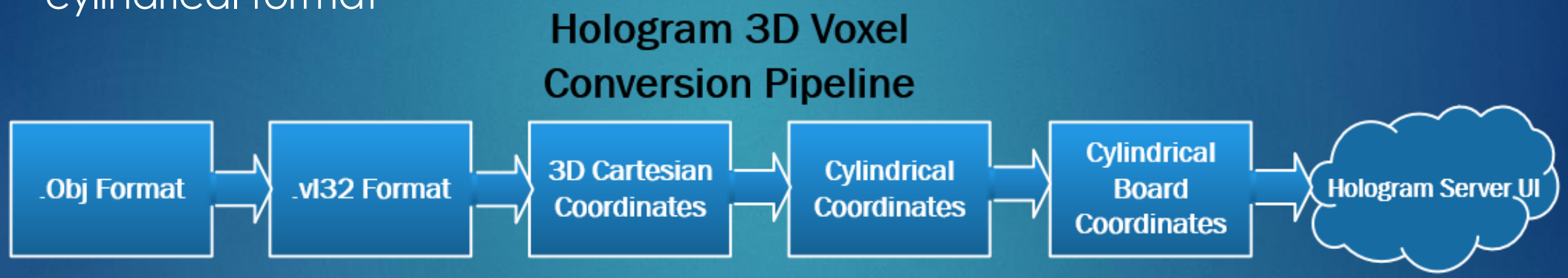

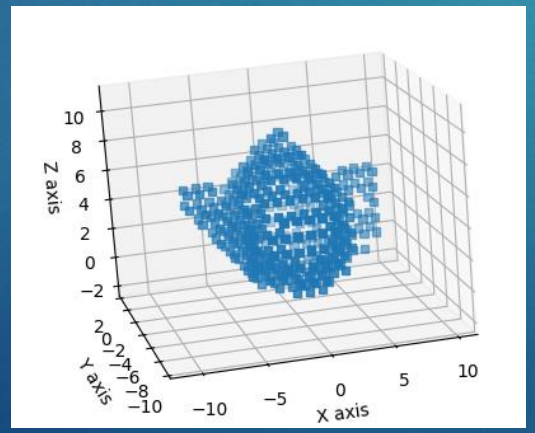


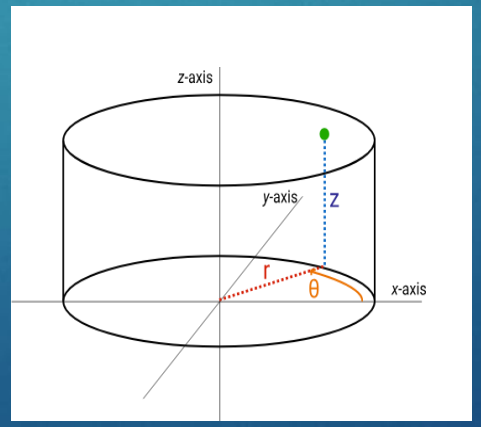


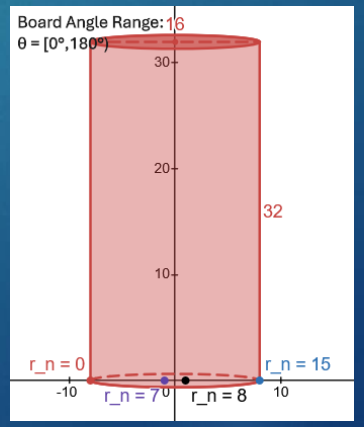

# Server UI

- WinForms application written in .NET 8
- Is the primary interface a user controls the Hologram from
- Communicates with the voxel conversion tool with Windows named pipes
- Communicates wirelessly with the microcontroller via TCP sockets over Wi-Fi
- Voxel conversion tool and display hardware feedback information is displayed

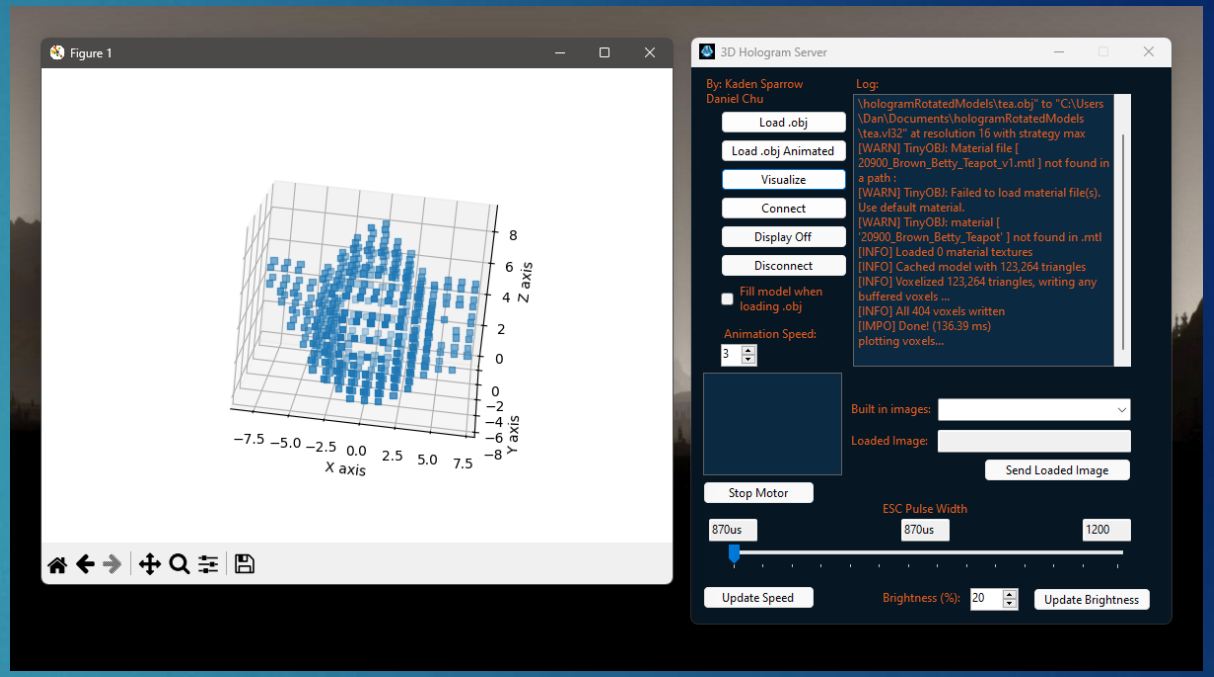


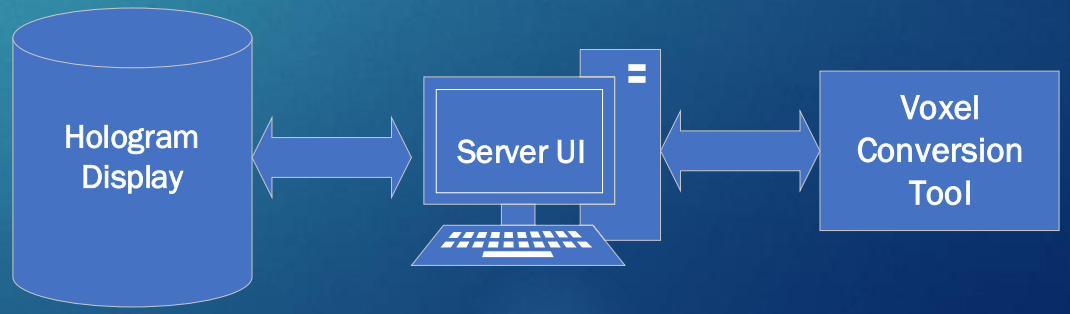

# Challenges

- Improperly designed decoupling capacitors
- Improperly mounted polar capacitor
- Inaccurate slip ring datasheet
- Mechanical design inexperience

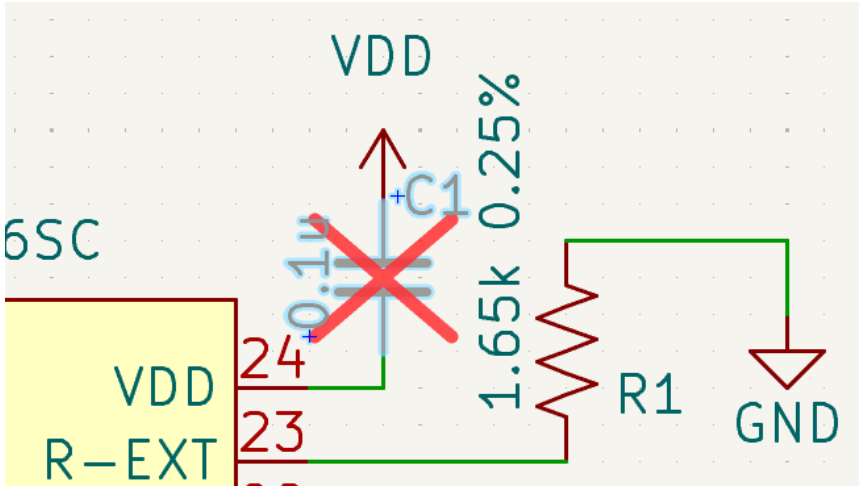


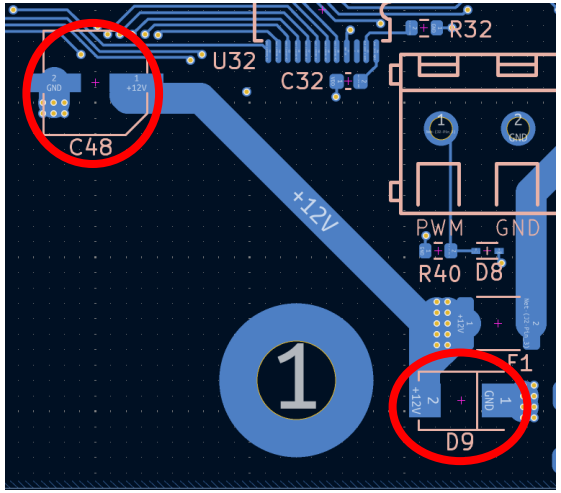


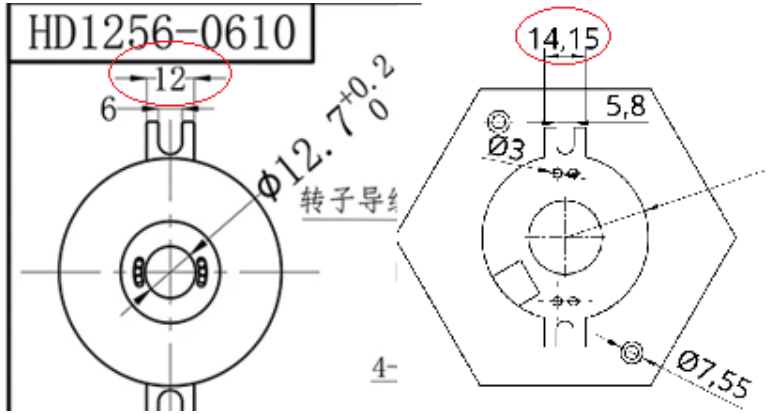


(Guangdong Hengxuan Electronic Technology Co., Ltd.,

# Results

In the end; our project achieved its primary goals of a fully functional, wireless volumetric display capable of rendering and animating 3D models.

# Possible Future Improvements

- Higher resolution color display
- Faster conversion pipeline
- Custom 3D model voxelizer
- Web UI

# Thank you!

- References


  - Richau, A. (2019, September 20). *6 ways holograms play an important role in Star Wars storytelling*. StarWars.com. https://www.starwars.com/news/6-ways-holograms-play-an-important-role-in-star-wars
  - Guangdong Hengxuan Electronic Technology Co., Ltd. (N/A). *HD1256-0610 Slip ring Datasheet*. Retrieved from https://www.alibaba.com/product-detail/Conductive-Slip-Ring-12-7mm-Bore_1600974440492.html

# Questions?

# Embedded Hardware Problems and Fixes

- Improperly designed decoupling capacitors
- Improperly mounted polar capacitor
- Improperly mounted ESD diode

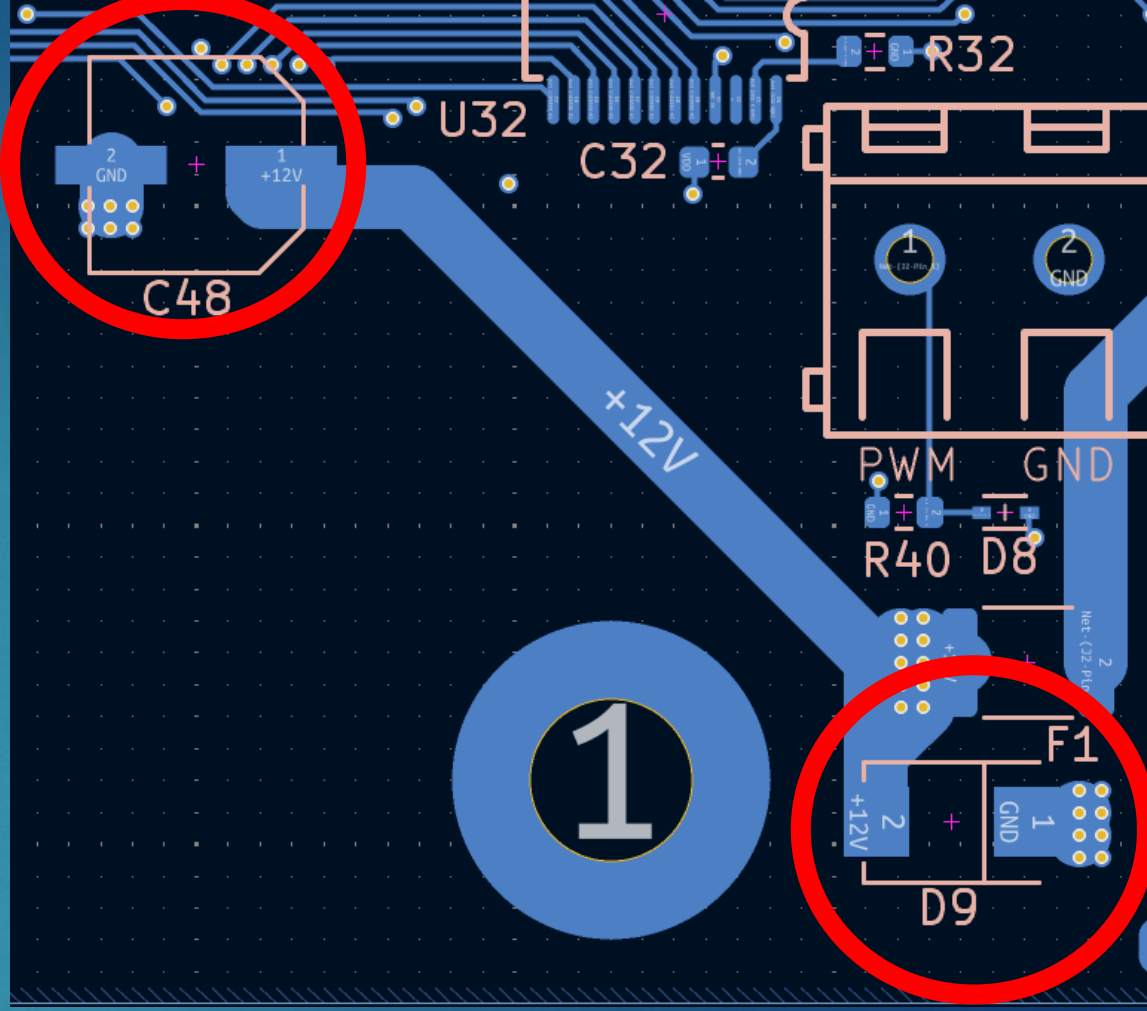


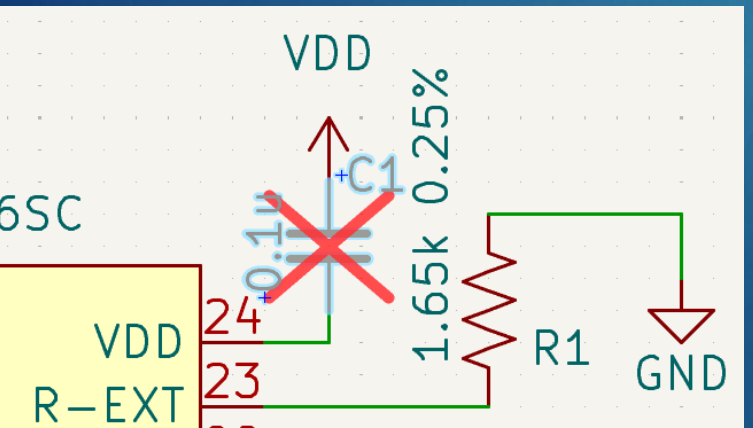


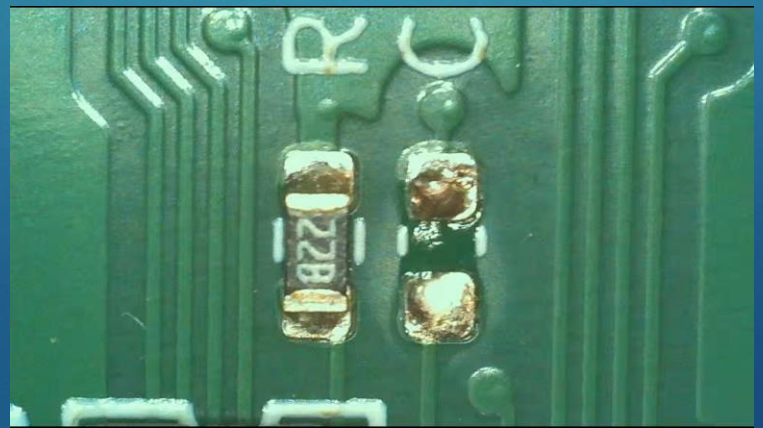


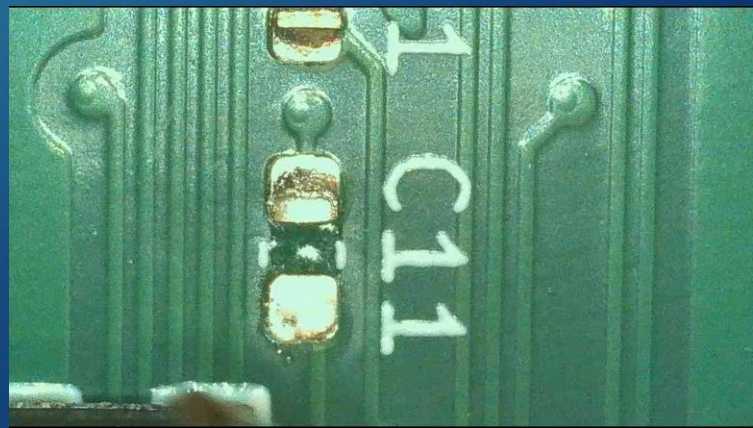

# 3D Print Design Issues

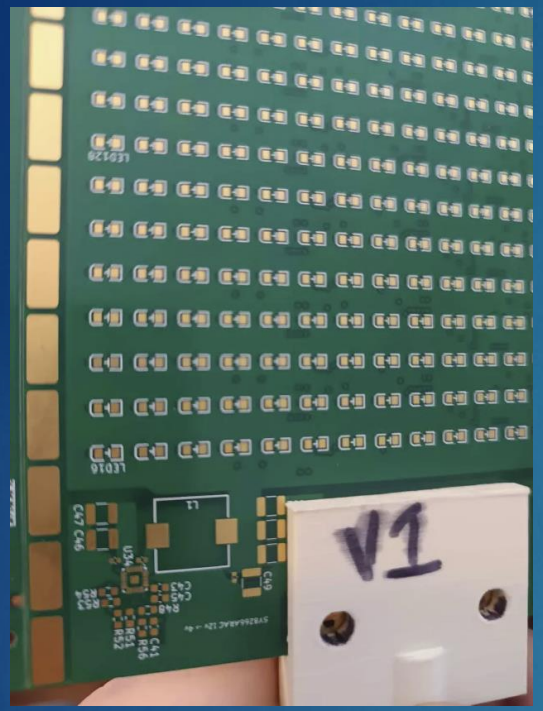

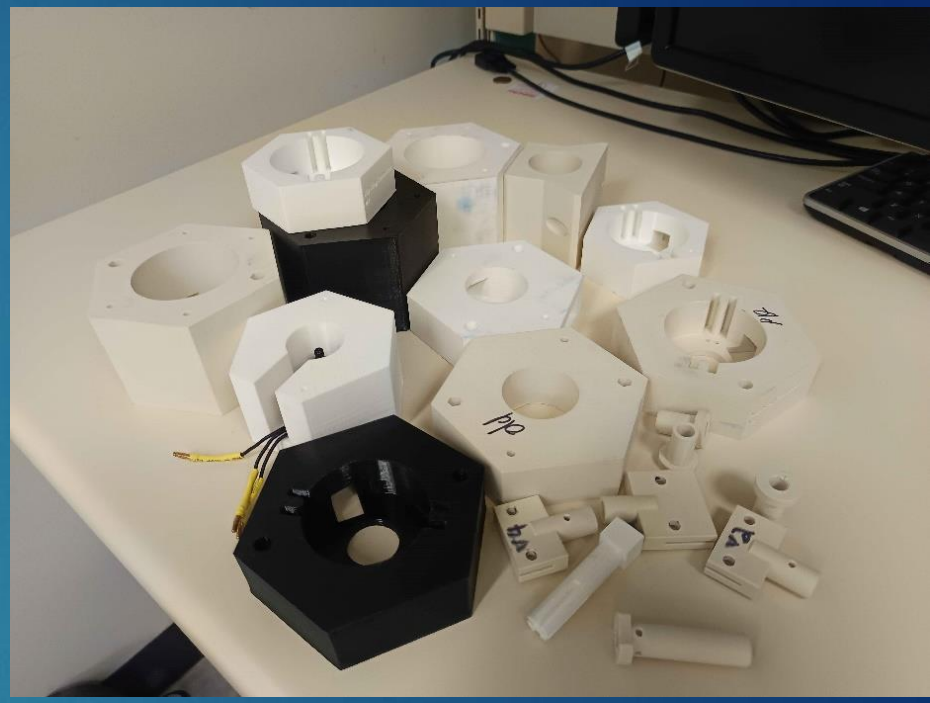
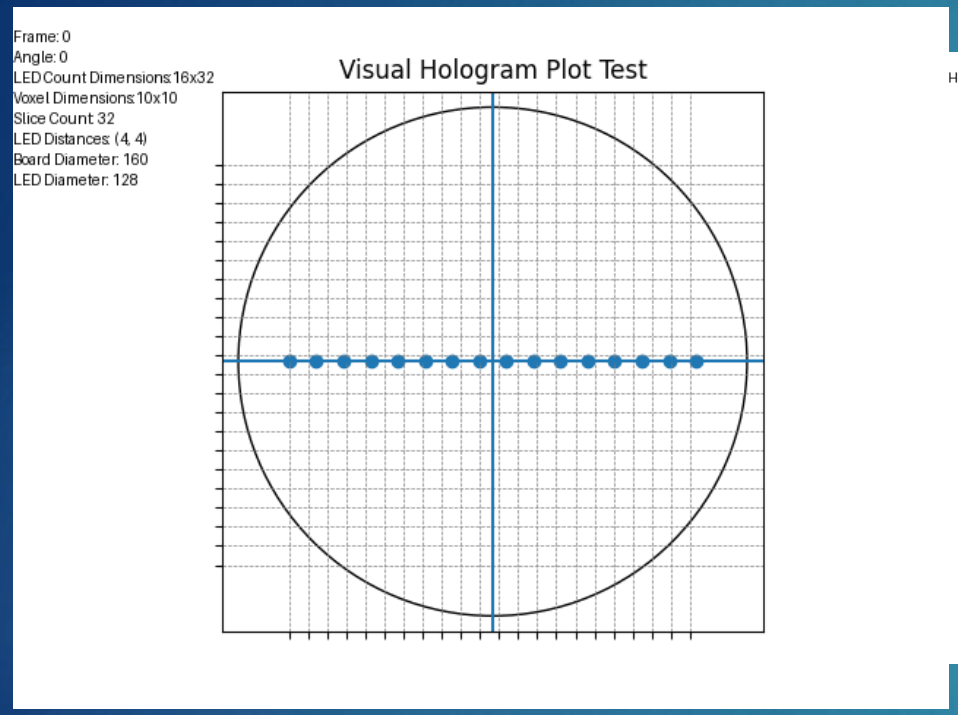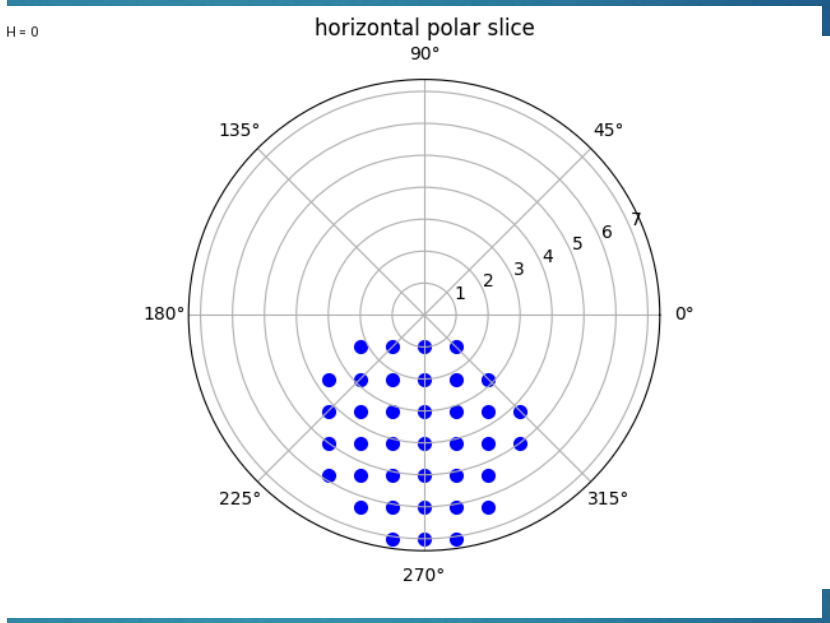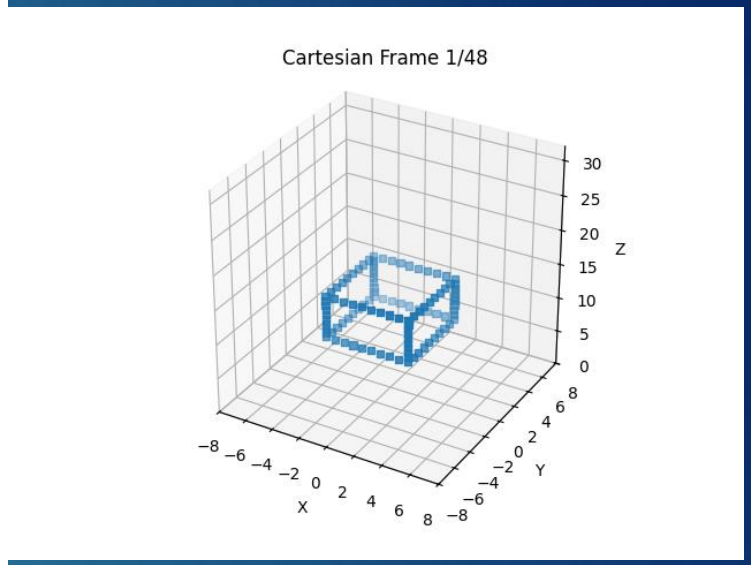
# Verification tools